WHITEWATER TOWNSHIP
GRAND TRAVERSE COUNTY, MICHIGAN
IN COOPERATION WITH
WATERWAYS GRANT PROGRAM
MICHIGAN DEPARTMENT OF NATURAL RESOURCES
FOR
WHITEWATER TOWNSHIP PARK IMPROVEMENTS
MARCH 2022

INDEX OF DRAWINGS

Sheet Title	Sheet Number
COVERSHEET	C100
OVERALL SITE & REMOVALS PLAN	C101
LAYOUT & GRADING PLAN - RANGER STATION	C102
LAYOUT & GRADING PLAN - PARKING LOT	C103
LAYOUT & GRADING PLAN - BOAT RAMP	C104
DETAILS	C500
LAUNCH AREA ENLARGEMENT PLAN & DETAILS	C501
DETAILS	C502
DETAILS	C503

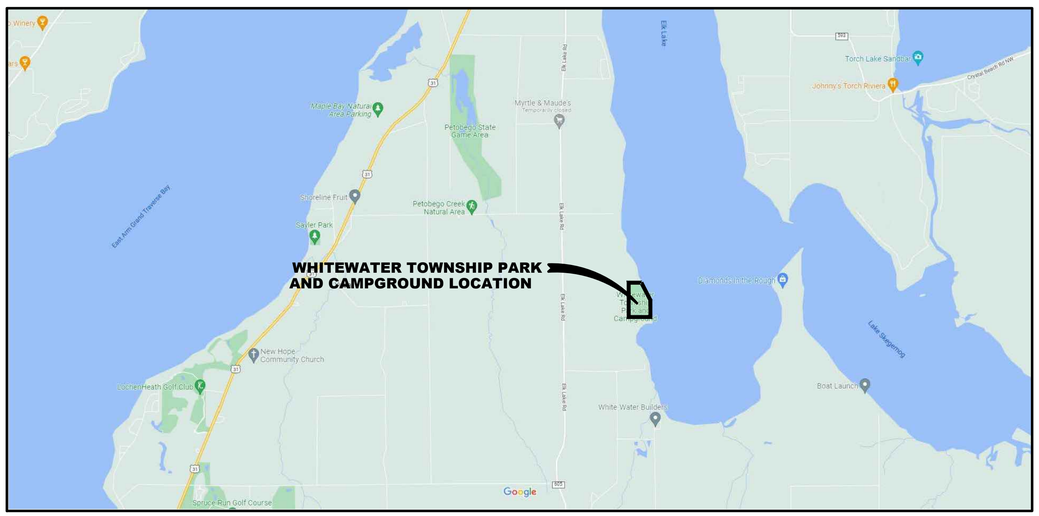

LOCATION MAP

VICINITY MAP

Know what's below. Call before you dig.

FLEIS & VANDENBRINK
DESIGN. BUILD. OPERATE.
603 Bay St, First Floor
Traverse City, MI 49684
P: 231.932.8600
F: 231.932.8700

WHITEWATER TOWNSHIP
9500, PARK RD, WILLIAMSBURG, MI
WHITEWATER TOWNSHIP PARK IMPROVEMENTS

842850_C100
031722 andrew.filler

MARCH 2022
F&V PROJECT NO.
842850

C100

M:\Proj\841001-842000\842850 Whitewater Park Waterways Grant Eng 2020\Cad\Plns\842850_C100.dwg - plotted on 3/17/2022 2:12 PM

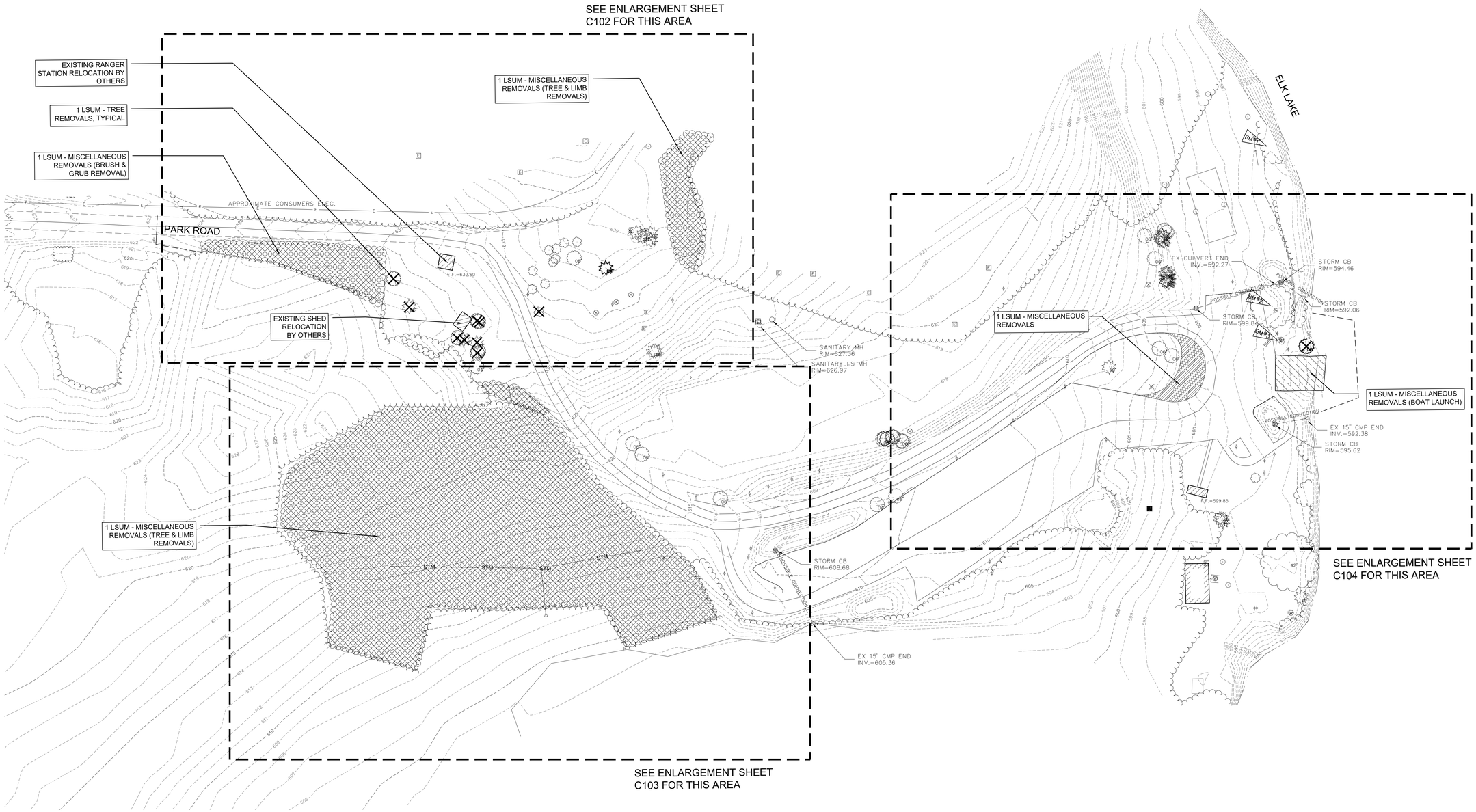

MISCELLANEOUS QUANTITIES THIS SHEET		
QUANTITY	UNIT	DESCRIPTION
1	LSum	Miscellaneous Removals

BM #1 EL. 596.48'
NAIL, E FACE 8" POPLAR, ±236' N OF BOAT LAUNCH
(NAVD88 GEOID18 VIA VRS, OPUS & GPS OBSV)

BM #2 EL. 597.71'
FOUND NAIL, W FACE 32" TREE, ±70' N OF BOAT LAUNCH
(NAVD88 GEOID18 VIA VRS, OPUS & GPS OBSV)

BM #3 EL. 596.50'
TOP OF WEST MOST STEEL POST @ HYDRANT, ±30' N OF BOAT LAUNCH
(NAVD88 GEOID18 VIA VRS, OPUS & GPS OBSV)

NOTES:
SITE WAS COVERED WITH 14+ INCHES OF SNOW AT TIME OF SURVEY

SITE IS SERVED BY UNDERGROUND ATT COMMUNICATIONS
DTE ENERGY GAS: CLEAR

REMOVAL NOTES:

1. THE CONTRACTOR SHALL LOCATE ALL UTILITIES PRIOR TO CONSTRUCTION OPERATIONS. CONTRACTOR WILL BE RESPONSIBLE FOR ANY DAMAGES TO UTILITIES CAUSED BY THEIR WORK. CONTACT MISS DIG (1-800-482-7171).
2. PROTECT ALL TREES AND SHRUBS NOT SCHEDULED FOR REMOVAL. DO NOT OPERATE EQUIPMENT, STORE, STOCKPILE, OR PARK WITHIN DRIP LINE OF PLANTS.
3. THE CONTRACTOR WILL BE HELD RESPONSIBLE FOR DAMAGE TO ITEMS NOT SCHEDULED FOR REMOVAL. REPAIRS SHALL BE MADE AT THE CONTRACTOR'S OWN EXPENSE.
4. REMOVAL ITEMS SHOWN ARE BASED ON BEST AVAILABLE INFORMATION AND ARE SHOWN SCHEMATICALLY. THE CONTRACTOR SHALL VISIT THE SITE PRIOR TO BID TO BE FULLY FAMILIAR WITH THE EXTENT OF REMOVAL ITEMS. THE CONTRACTOR IS RESPONSIBLE FOR ALL REMOVALS NECESSARY TO COMPLETE CONSTRUCTION. QUESTIONS REGARDING ITEMS TO BE REMOVED SHALL BE DIRECTED TO THE ENGINEER PRIOR TO CONSTRUCTION.
5. CLEARING AND DEMOLITION SHALL INCLUDE COMPLETE REMOVAL OF ALL ITEMS NOTED AND SHALL INCLUDE BACKFILL OF VOIDS WITH CLASS II SAND.
6. ALL MATERIALS REMOVED SHALL BECOME THE PROPERTY OF THE CONTRACTOR AND SHALL BE DISPOSED OF OFF SITE IN ACCORDANCE WITH ALL APPLICABLE STANDARDS AND REGULATIONS.
7. CONTRACTOR SHALL BE RESPONSIBLE FOR PROTECTING ALL EXISTING SIDEWALKS, PAVEMENTS AND CURB & GUTTER. ANY DAMAGE TO THESE ITEMS SHALL BE REPLACED AT NO COST TO THE OWNER.
8. ALL REMOVALS ARE TO BE MADE TO A CLEAN SAW EDGE BY THE CONTRACTOR. ALL LINES TO BE SMOOTH AND STRAIGHT WHENEVER POSSIBLE.
9. SOIL EROSION MEASURES SUCH AS INLET PROTECTION DEVICES, SILT FENCE ARE THE RESPONSIBILITY OF THE CONTRACTOR PERFORMING THE WORK AS WELL AS OBTAINING SESC PERMIT FROM WHITEWATER TOWNSHIP. ALL MEASURES REQUIRED SHALL BE IN PLACE PRIOR TO COMMENCEMENT OF WORK BY CONTRACTOR.

REMOVAL LEGEND

- PAVEMENT REMOVAL, COMPLETE
- BRUSH AND GRUB, COMPLETE
- BOAT LAUNCH REMOVAL, COMPLETE

Know what's **below.**
Call before you dig.

NORTH

0 50
SCALE IN FEET

FLEIS&VANDENBRINK
DESIGN. BUILD. OPERATE.
603 Bay St, First Floor
Traverse City, MI 49684
P: 231.932.8600
F: 231.932.8700

REVISION:

WHITEWATER TOWNSHIP
9500, PARK RD, WILLIAMSBURG, MI
WHITEWATER TOWNSHIP PARK IMPROVEMENTS

OVERALL SITE & REMOVALS PLAN

DESIGN TEAM:	PROJ MNGR: RS DESIGNED BY: AF / RS DRAWN BY: AF CHECK BY:

842850_C101 REMOVALS
031722 andrew.filler

MARCH 2022

F&V PROJECT NO.
842850

C101

M:\Proj842100--842500\842850 Whitewater Park Waterways Grant Eng 2020\Cad\Plns\842850_C101 REMOVALS.dwg -- plotted on 3/17/2022 2:12 PM

BM #1 EL. 596.48'
NAIL, E FACE 8" POPLAR, ±236' N OF BOAT LAUNCH
(NAVD88 GEOID18 VIA VRS, OPUS & GPS OBSV)

BM #2 EL. 597.71'
FOUND NAIL, W FACE 32" TREE, ±70' N OF BOAT LAUNCH
(NAVD88 GEOID18 VIA VRS, OPUS & GPS OBSV)

BM #3 EL. 596.50'
TOP OF WEST MOST STEEL POST @ HYDRANT, ±30' N OF BOAT LAUNCH
(NAVD88 GEOID18 VIA VRS, OPUS & GPS OBSV)

NOTES:
SITE WAS COVERED WITH 14+ INCHES OF SNOW AT TIME OF SURVEY

SITE IS SERVED BY UNDERGROUND ATT COMMUNICATIONS
DTE ENERGY GAS: CLEAR

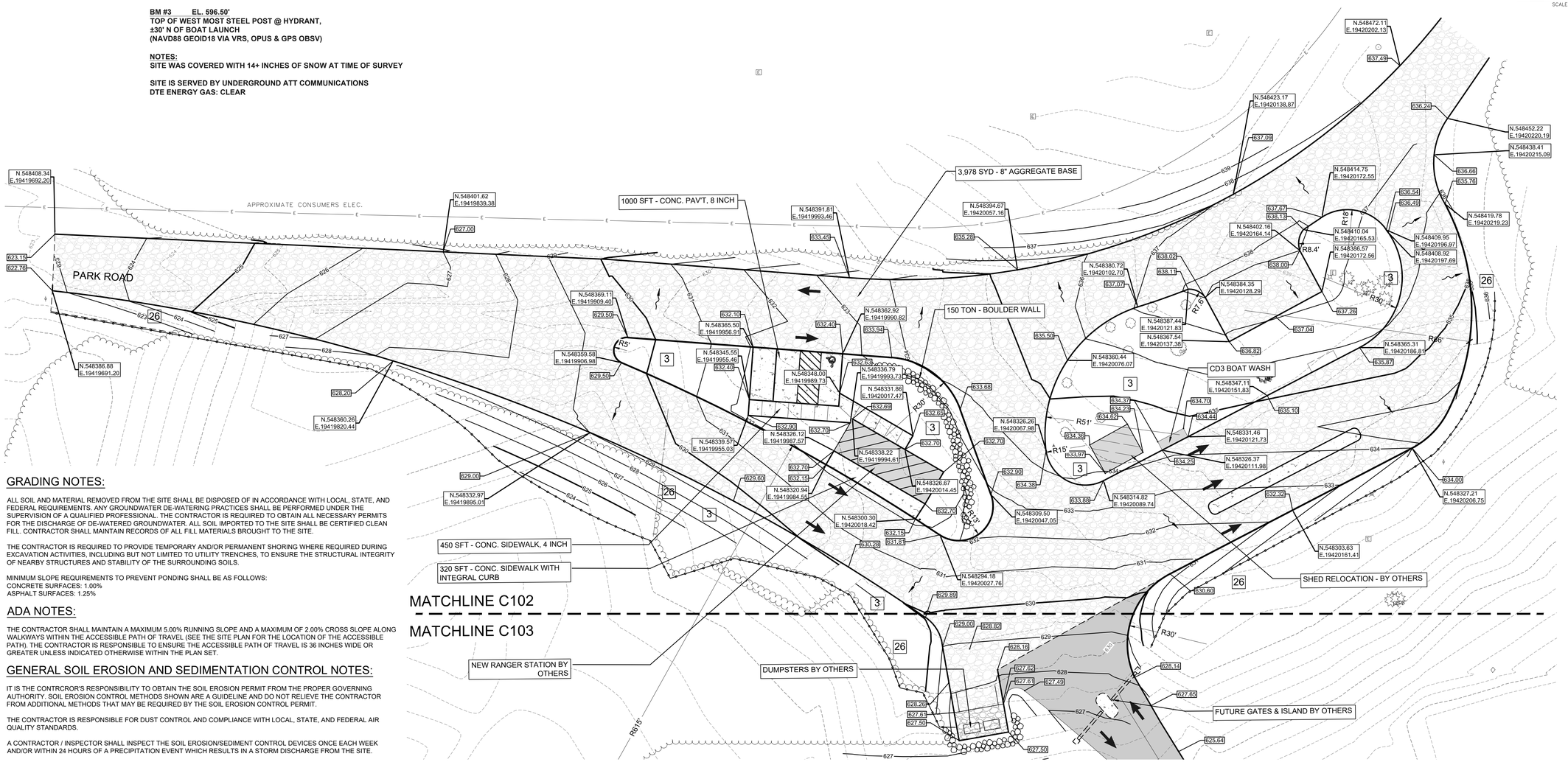

GRADING NOTES:

ALL SOIL AND MATERIAL REMOVED FROM THE SITE SHALL BE DISPOSED OF IN ACCORDANCE WITH LOCAL, STATE, AND FEDERAL REQUIREMENTS. ANY GROUNDWATER DE-WATERING PRACTICES SHALL BE PERFORMED UNDER THE SUPERVISION OF A QUALIFIED PROFESSIONAL. THE CONTRACTOR IS REQUIRED TO OBTAIN ALL NECESSARY PERMITS FOR THE DISCHARGE OF DE-WATERED GROUNDWATER. ALL SOIL IMPORTED TO THE SITE SHALL BE CERTIFIED CLEAN FILL. CONTRACTOR SHALL MAINTAIN RECORDS OF ALL FILL MATERIALS BROUGHT TO THE SITE.

THE CONTRACTOR IS REQUIRED TO PROVIDE TEMPORARY AND/OR PERMANENT SHORING WHERE REQUIRED DURING EXCAVATION ACTIVITIES, INCLUDING BUT NOT LIMITED TO UTILITY TRENCHES, TO ENSURE THE STRUCTURAL INTEGRITY OF NEARBY STRUCTURES AND STABILITY OF THE SURROUNDING SOILS.

MINIMUM SLOPE REQUIREMENTS TO PREVENT PONDING SHALL BE AS FOLLOWS:
CONCRETE SURFACES: 1.00%
ASPHALT SURFACES: 1.25%

ADA NOTES:

THE CONTRACTOR SHALL MAINTAIN A MAXIMUM 5.00% RUNNING SLOPE AND A MAXIMUM OF 2.00% CROSS SLOPE ALONG WALKWAYS WITHIN THE ACCESSIBLE PATH OF TRAVEL (SEE THE SITE PLAN FOR THE LOCATION OF THE ACCESSIBLE PATH). THE CONTRACTOR IS RESPONSIBLE TO ENSURE THE ACCESSIBLE PATH OF TRAVEL IS 36 INCHES WIDE OR GREATER UNLESS INDICATED OTHERWISE WITHIN THE PLAN SET.

GENERAL SOIL EROSION AND SEDIMENTATION CONTROL NOTES:

IT IS THE CONTRCROR'S RESPONSIBILITY TO OBTAIN THE SOIL EROSION PERMIT FROM THE PROPER GOVERNING AUTHORITY. SOIL EROSION CONTROL METHODS SHOWN ARE A GUIDELINE AND DO NOT RELIEVE THE CONTRACTOR FROM ADDITIONAL METHODS THAT MAY BE REQUIRED BY THE SOIL EROSION CONTROL PERMIT.

THE CONTRACTOR IS RESPONSIBLE FOR DUST CONTROL AND COMPLIANCE WITH LOCAL, STATE, AND FEDERAL AIR QUALITY STANDARDS.

A CONTRACTOR / INSPECTOR SHALL INSPECT THE SOIL EROSION/SEDIMENT CONTROL DEVICES ONCE EACH WEEK AND/OR WITHIN 24 HOURS OF A PRECIPITATION EVENT WHICH RESULTS IN A STORM DISCHARGE FROM THE SITE.

ALL DISTURBED NON-PAVEMENT AREAS MUST BE RESTORED WITH TOPSOIL, SEED, FERTILIZER, AND MULCH UNLESS SODDED. (SEE LANDSCAPE PLAN)

ALL SLOPES STEEPER THAN 1V:3H SHALL USE AN EROSION CONTROL BLANKET (NORTH AMERICAN GREEN S150BN OR EQUAL). ALL SLOPES BETWEEN 1V:4H AND 1V:3H SHALL USE AN EROSION CONTROL BLANKET (NORTH AMERICAN GREEN DS75 OR EQUAL). UNLESS INDICATED OTHERWISE ON PLANS.

SILT FENCE SHALL BE TRENCHED IN, BACKFILLED, AND STAPLED OR STAKED ACCORDING TO THE MANUFACTURER'S SPECIFICATIONS. MAINTENANCE INCLUDES THE REMOVAL OF BUILT-UP SEDIMENT WHEN THE SEDIMENT ACCUMULATES TO 1/3 TO 1/2 THE HEIGHT OF THE FENCE. CONTRACTOR SHALL REMOVE, REPLACE, RETRENCH, OR REBACKFILL THE FENCE IF IT FAILS. CONTRACTOR SHALL REINSTALL IF ANY PORTION OF THE FENCING IS DAMAGED BY CONSTRUCTION MACHINERY.

DETENTION BASIN(S) SHALL THE CONTRACTOR IS RESPONSIBLE FOR REMOVING ALL ACCUMULATED SEDIMENT AND RESTORATION OF THE BASIN PRIOR TO ACCEPTANCE BY THE [OWNER] [REGULATORY AGENCY].

THE CONTRACTOR WILL ENGAGE A CERTIFIED STORM WATER OPERATOR IN ACCORDANCE WITH EPA PHASE II RULES TO MEET REQUIREMENTS OF THE PERMIT.

SOIL EROSION/SEDIMENTATION CONTROL
OPERATION TIME SCHEDULE

CONSTRUCTION SEQUENCE	MAR	APR	MAY	JUN	JUL	AUG	SEP	OCT	NOV
STRIP AND STOCKPILE TOPSOIL									
ROUGH GRADE/ SEDIMENT CONTROL									
TEMP CONTROL MEASURES									
FOUNDATION/ BLDG. CONSTRUCTION									
SITE CONSTRUCTION									
PERM CONTROL MEASURES									
FINISH GRADING									
LANDSCAPING									

SOIL EROSION AND SEDIMENTATION CONTROL MEASURES

KEY	DETAIL	CHARACTERISTICS
3	PERMANENT/ TEMPORARY SEEDING	INEXPENSIVE BUT EFFECTIVE EROSION CONTROL MEASURE TO STABILIZE FLAT AREAS AND MILD SLOPES. PERMITS RUNOFF TO INFILTRATE SOIL, REDUCING RUNOFF VOLUMES. PROPER PREPARATION OF THE SEED BED, FERTILIZATION, MULCHING AND WATERING IS CRITICAL TO ITS SUCCESS.
26	SILT FENCE	A PERMEABLE BARRIER ERECTED BELOW DISTURBED AREAS TO CAPTURE SEDIMENTS FROM SHEET FLOW. CAN BE SUED TO DIVERT SMALL VOLUMES OF WATER TO STABLE OUTLETS. INEFFECTIVE AS A FILTER AND NEVER BE PLACED ACROSS STREAMS OR DITCHES WHERE FLOW IS CONCENTRATED.
58	INLET PROTECTION FABRIC DROP	USE AT STORMWATER INLETS, ESPECIALLY AT CONSTRUCTION SITES.

MISCELLANEOUS QUANTITIES THIS SHEET

QUANTITY	UNIT	DESCRIPTION
1	LSUM	General Conditions, Bonds and Insurance 5%Max
1	LSUM	Slope Restoration
1	LSUM	Turf Establishment, Performance
1	LSUM	Site Preparation & Grading
1	LSUM	Soil Erosion Control

PROPOSED GRADING & UTILITY LEGEND

871.2 PROP SPOT ELEVATION
OVERLAND FLOW DIRECTION
SILT FENCE

PROPOSED SITE LAYOUT LEGEND

CONCRETE SIDEWALK
BOULDER WALL
GRAVEL

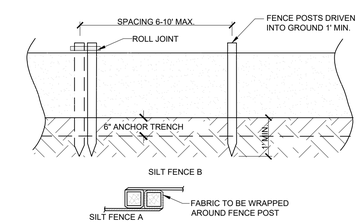

ROLL JOINTS

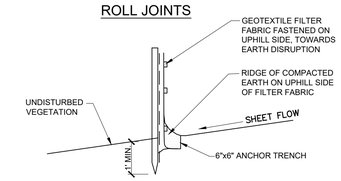

SILT FENCE

Know what's below. Call before you dig.

FLEIS&VANDENBRINK
DESIGN. BUILD. OPERATE.
603 Bay St, First Floor
Traverse City, MI 49684
P: 231.932.8600
F: 231.932.8700

REVISION:

WHITEWATER TOWNSHIP
9500, PARK RD, WILLIAMSBURG, MI
WHITEWATER TOWNSHIP PARK IMPROVEMENTS
LAYOUT & GRADING PLAN - RANGER STATION

DESIGN TEAM: PROJ MNGR: RS; DESIGNED BY: AF / RS; DRAWN BY: AF; CHECK BY:

842850_C102 LAYOUT & GRADING PLAN
031722 andrew.filler

MARCH 2022
F&V PROJECT NO. 842850

C102

M:\Proj842001-843000\842850 Whitewater Park Waterways Grant Eng 2020\Cad\Proj\842850_C102 LAYOUT & GRADING PLAN.dwg - plotted on 3/17/2022 2:12 PM

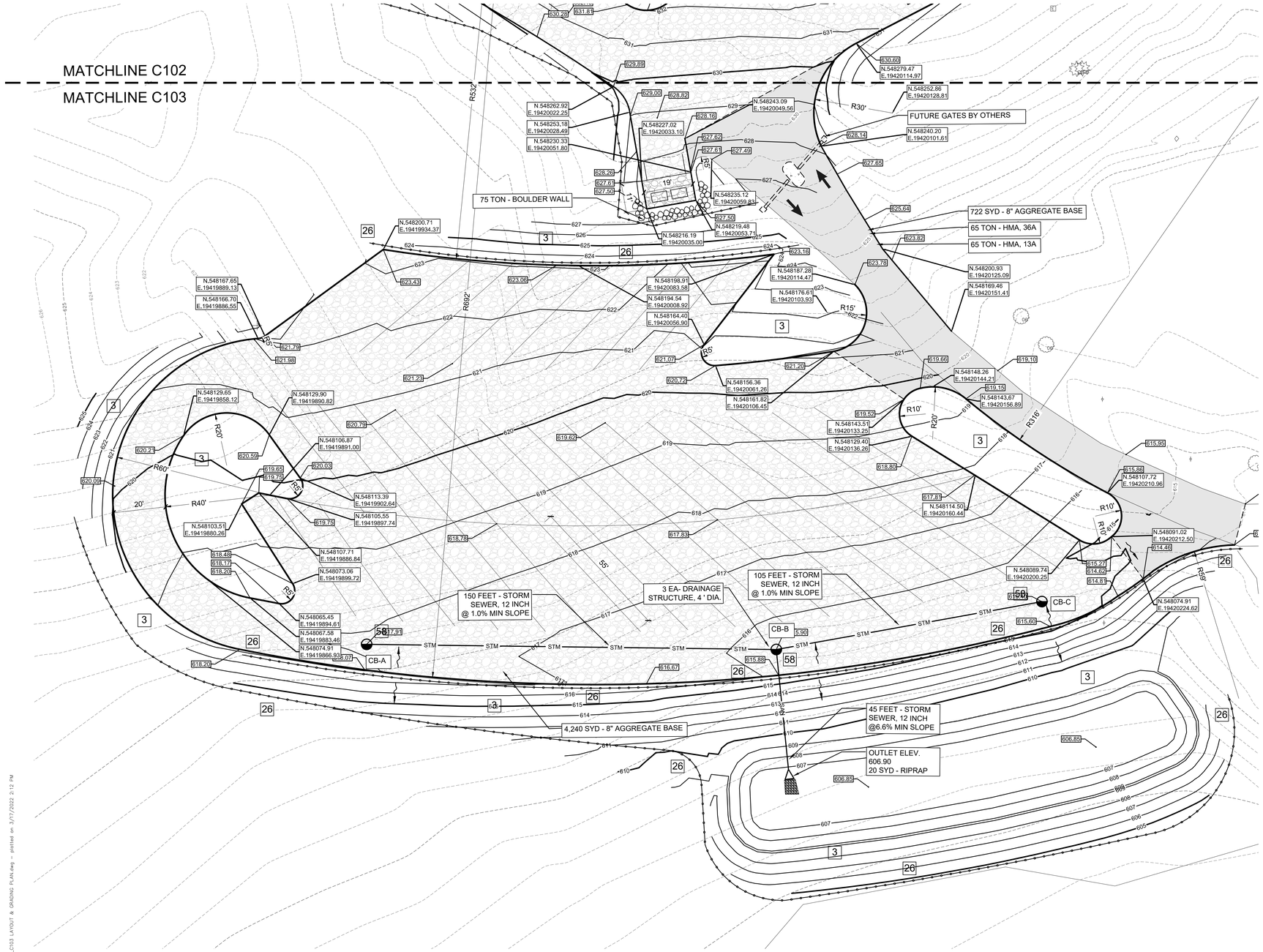

NORTH

0 20 40

SCALE IN FEET

SOIL EROSION AND SEDIMENTATION CONTROL MEASURES		
KEY	DETAIL	CHARACTERISTICS
3	PERMANENT/ TEMPORARY SEEDING	INEXPENSIVE BUT EFFECTIVE EROSION CONTROL MEASURE TO STABILIZE FLAT AREAS AND MILD SLOPES. PERMITS RUNOFF TO INFILTRATE SOIL, REDUCING RUNOFF VOLUMES. PROPER PREPARATION OF THE SEED BED, FERTILIZATION, MULCHING AND WATERING IS CRITICAL TO ITS SUCCESS.
26	SILT FENCE	A PERMEABLE BARRIER ERECTED BELOW DISTURBED AREAS TO CAPTURE SEDIMENTS FROM SHEET FLOW. CAN BE SUED TO DIVERT SMALL VOLUMES OF WATER TO STABLE OUTLETS. INEFFECTIVE AS A FILTER AND NEVER BE PLACED ACROSS STREAMS OR DITCHES WHERE FLOW IS CONCENTRATED.
58	INLET PROTECTION FABRIC DROP	USE AT STORMWATER INLETS. ESPECIALLY AT CONSTRUCTION SITES.

SOIL EROSION/SEDIMENTATION CONTROL OPERATION TIME SCHEDULE

CONSTRUCTION SEQUENCE	MAR	APR	MAY	JUN	JUL	AUG	SEP	OCT	NOV
STRIP AND STOCKPILE TOPSOIL		■	■						
ROUGH GRADE/ SEDIMENT CONTROL		■	■	■	■	■	■	■	■
TEMP CONTROL MEASURES		■	■	■	■	■	■	■	■
FOUNDATION/ BLDG. CONSTRUCTION		■	■	■	■	■	■	■	■
SITE CONSTRUCTION		■	■	■	■	■	■	■	■
PERM CONTROL MEASURES								■	■
FINISH GRADING								■	■
LANDSCAPING								■	■

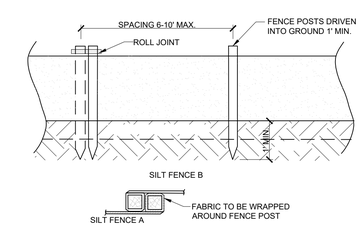

ROLL JOINTS

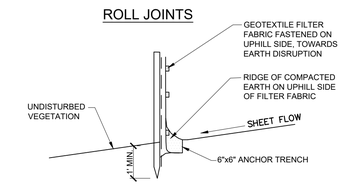

SILT FENCE

Know what's below. Call before you dig.

STORM SEWER STRUCTURE TABLE

CB-A 4'Ø CONC. CB
RIM= 617.90
12" INV. SE =613.00
SUMP= 612.00

CB-B: 4'Ø CONC. CB
RIM= 615.70
12" INV. E = 610.50
12" INV. W = 610.50
12" INV. S = 610.90
SUMP= 608.70

CB-C: 4'Ø CONC. CB
RIM= 615.40
12 " INV. W = 611.70
SUMP= 609.70

THE FOLLOWING COVERS ARE TO BE USED:
CATCH BASIN:

PARKING AREA - EJIW #1045Z1-M1

BM #1 EL. 596.48'
NAIL, E FACE 8" POPLAR, ±236' N OF BOAT LAUNCH
(NAVD88 GEOID18 VIA VRS, OPUS & GPS OBSV)

BM #2 EL. 597.71'
FOUND NAIL, W FACE 32" TREE, ±70' N OF BOAT LAUNCH
(NAVD88 GEOID18 VIA VRS, OPUS & GPS OBSV)

BM #3 EL. 596.50'
TOP OF WEST MOST STEEL POST @ HYDRANT, ±30' N OF BOAT LAUNCH
(NAVD88 GEOID18 VIA VRS, OPUS & GPS OBSV)

NOTES:
SITE WAS COVERED WITH 14+ INCHES OF SNOW AT TIME OF SURVEY

SITE IS SERVED BY UNDERGROUND ATT COMMUNICATIONS
DTE ENERGY GAS: CLEAR

MISCELLANEOUS QUANTITIES THIS SHEET		
QUANTITY	UNIT	DESCRIPTION
1	LSUM	General Conditions, Bonds and Insurance 5%Max
1	LSUM	Slope Restoration
1	LSUM	Turf Establishment, Performance
1	LSUM	Site Preparation & Grading
1	LSUM	Soil Erosion Control

PROPOSED GRADING & UTILITY LEGEND

871.2 PROP SPOT ELEVATION
OVERLAND FLOW DIRECTION
SILT FENCE

PROPOSED SITE LAYOUT LEGEND

CONCRETE SIDEWALK
BOULDER WALL
GRAVEL

FLEIS&VANDENBRINK
DESIGN. BUILD. OPERATE.
603 Bay St, First Floor
Traverse City, MI 49684
P: 231.932.8600
F: 231.932.8700

REVISION:

WHITEWATER TOWNSHIP
9500, PARK RD, WILLIAMSBURG, MI
WHITEWATER TOWNSHIP PARK IMPROVEMENTS

LAYOUT & GRADING PLAN - PARKING LOT

DESIGN TEAM: PROJ MNGR: RS; DESIGNED BY: AF / RS; DRAWN BY: AF; CHECK BY:

842850_C103 LAYOUT & GRADING PLAN
031722 andrew.filler

MARCH 2022

F&V PROJECT NO. 842850

C103

M:\Proj\841001-845000\842850 Whitewater Park Waterways Grant Eng 2020\Cad\Proj\842850_C103 LAYOUT & GRADING PLAN.dwg - plotted on 3/17/2022 2:12 PM

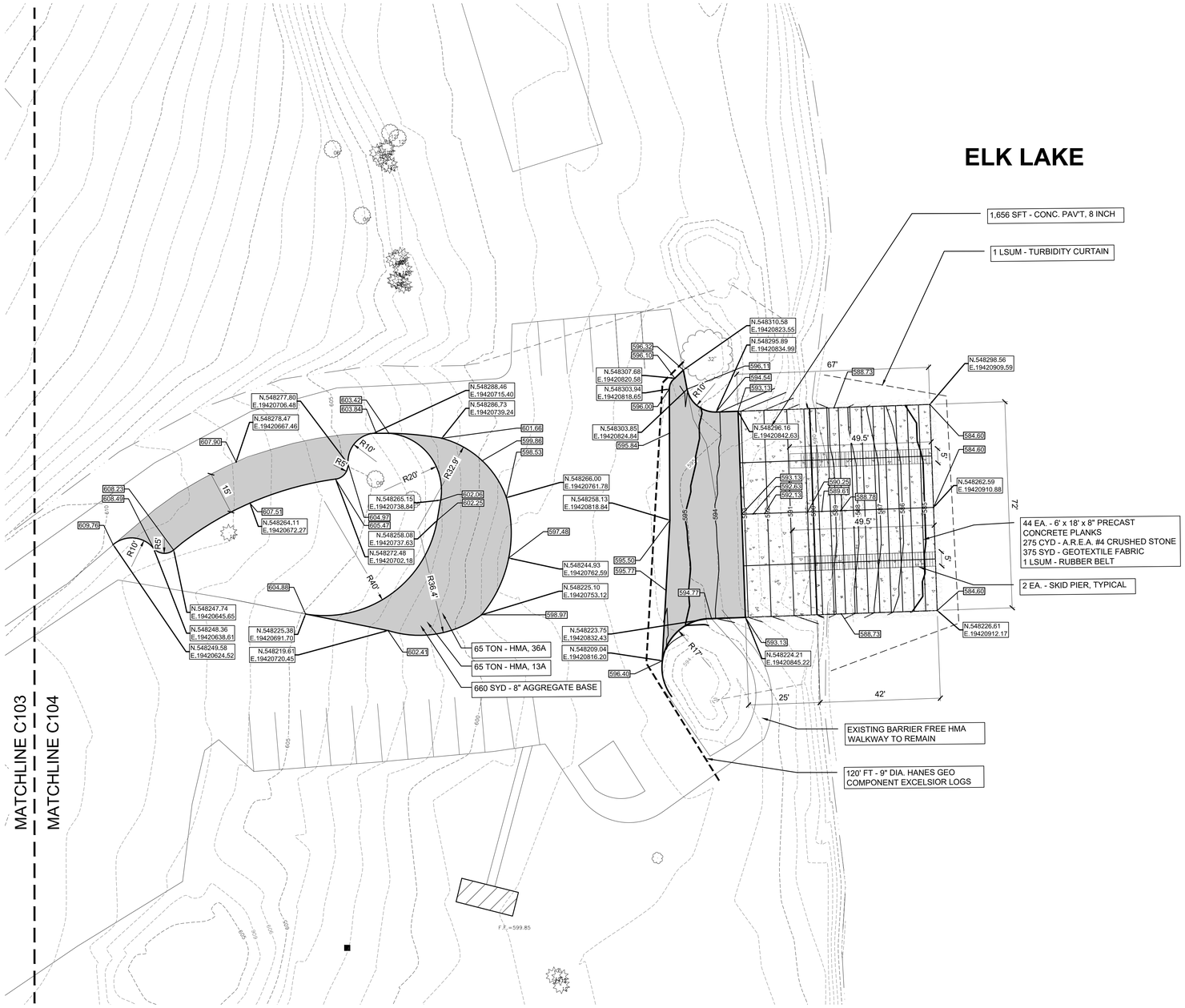

NORTH

0 20 40
SCALE IN FEET

MISCELLANEOUS QUANTITIES THIS SHEET		
QUANTITY	UNIT	DESCRIPTION
1	LSUM	General Conditions, Bonds and Insurance 5%Max
1	LSUM	Slope Restoration
1	LSUM	Turf Establishment, Performance
1	LSUM	Site Preparation & Grading
1	LSUM	Soil Erosion Control

PROPOSED GRADING & UTILITY LEGEND

871.2 PROP SPOT ELEVATION

OVERLAND FLOW DIRECTION

SILT FENCE

PROPOSED SITE LAYOUT LEGEND

CONCRETE SIDEWALK

BOULDER WALL

GRAVEL

SOIL EROSION AND SEDIMENTATION CONTROL MEASURES		
KEY	DETAIL	CHARACTERISTICS
3	PERMANENT/ TEMPORARY SEEDING	INEXPENSIVE BUT EFFECTIVE EROSION CONTROL MEASURE TO STABILIZE FLAT AREAS AND MILD SLOPES. PERMITS RUNOFF TO INFILTRATE SOIL, REDUCING RUNOFF VOLUMES. PROPER PREPARATION OF THE SEED BED, FERTILIZATION, MULCHING AND WATERING IS CRITICAL TO ITS SUCCESS.
26	SILT FENCE	A PERMEABLE BARRIER ERECTED BELOW DISTURBED AREAS TO CAPTURE SEDIMENTS FROM SHEET FLOW. CAN BE SUED TO DIVERT SMALL VOLUMES OF WATER TO STABLE OUTLETS. INEFFECTIVE AS A FILTER AND NEVER BE PLACED ACROSS STREAMS OR DITCHES WHERE FLOW IS CONCENTRATED.
58	INLET PROTECTION FABRIC DROP	USE AT STORMWATER INLETS, ESPECIALLY AT CONSTRUCTION SITES.

SOIL EROSION/SEDIMENTATION CONTROL OPERATION TIME SCHEDULE									
CONSTRUCTION SEQUENCE	MAR	APR	MAY	JUN	JUL	AUG	SEP	OCT	NOV
STRIP AND STOCKPILE TOPSOIL		■	■						
ROUGH GRADE/ SEDIMENT CONTROL		■	■						
TEMP CONTROL MEASURES		■	■	■	■	■	■	■	■
FOUNDATION/ BLDG. CONSTRUCTION		■	■	■	■	■	■	■	■
SITE CONSTRUCTION		■	■	■	■	■	■	■	■
PERM CONTROL MEASURES								■	■
FINISH GRADING								■	■
LANDSCAPING								■	■

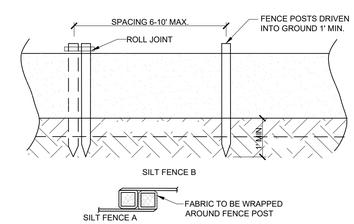

ROLL JOINTS

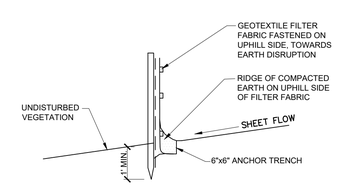

SILT FENCE

Know what's below. Call before you dig.

FLEIS&VANDENBRINK
DESIGN. BUILD. OPERATE.
603 Bay St, First Floor
Traverse City, MI 49684
P: 231.932.8600
F: 231.932.8700

REVISION:

WHITEWATER TOWNSHIP
9500, PARK RD, WILLIAMSBURG, MI
WHITEWATER TOWNSHIP PARK IMPROVEMENTS

LAYOUT & GRADING PLAN - BOAT RAMP

DESIGN TEAM: PROJ MNGR: RS
DESIGNED BY: AF / RS
DRAWN BY: AF
CHECK BY:

842850_C104 LAYOUT & GRADING PLAN
031722 andrew.filler

MARCH 2022

F&V PROJECT NO.
842850

C104

M:\Proj\841001-843000\842850 Whitewater Park Waterways Grant Eng 2020\Cad\Proj\842850_C104 LAYOUT & GRADING PLAN.dwg - plotted on 3/17/2022 2:12 PM

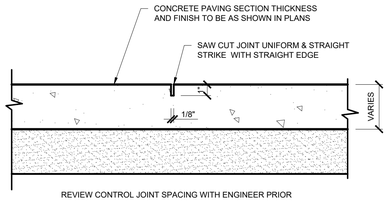

SAWCUT CONTROL JOINT DETAIL

NOT TO SCALE

PARKING PAVEMENT DETAIL - HMA APPLICATION TABLE					
COURSE	TYPE	ITEM	EST. YIELD	PERFORMANCE GRADE	ASPHALT VISCOSITY
1	SURFACE	HMA,13A	165#/SYD	58-28	AC-10
2	BASE	HMA, 36A	165#/SYD	58-28	AC-10

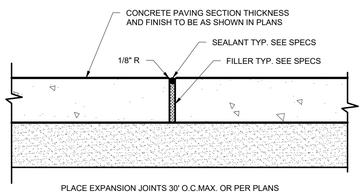

EXPANSION JOINT DETAIL

NOT TO SCALE

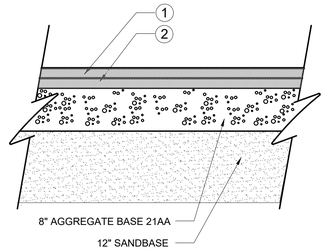

TYPICAL HMA PARKING PAVEMENT SECTION

NOT TO SCALE

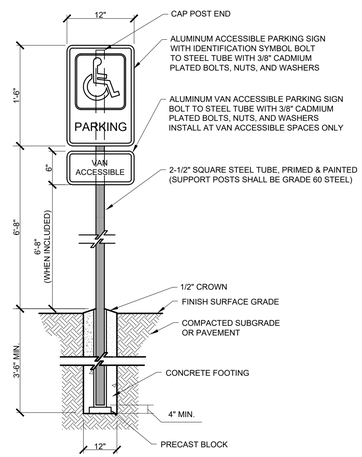

BARRIER FREE PARKING SIGN DETAIL

NOT TO SCALE

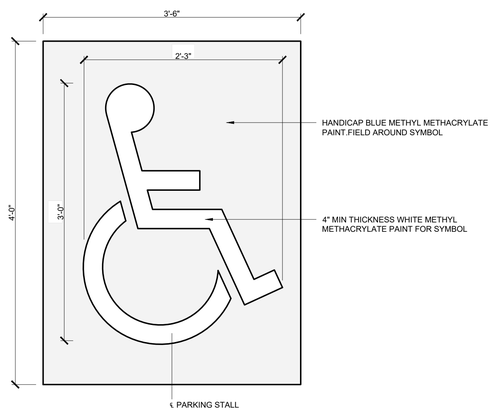

PAINTED HANDICAP SYMBOL

NOT TO SCALE

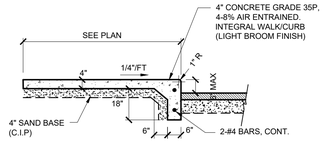

NOTE:
1) PROVIDE 3/8" EXPANSION JOINT WHERE
WALK MEETS BUILDING OR RETAINING WALL.

2) PROVIDE CONTROL JOINTS AT 8' O/C

INTEGRAL CONCRETE SIDEWALK

NOT TO SCALE

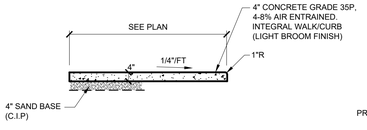

NOTE:
1) PROVIDE 3/8" EXPANSION JOINT WHERE
WALK MEETS BUILDING OR RETAINING WALL.

2) PROVIDE CONTROL JOINTS AT 8' O/C

CONCRETE SIDEWALK

NOT TO SCALE

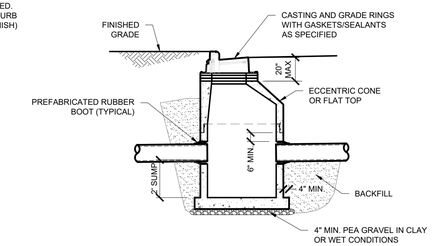

4' DIA. CATCH BASIN

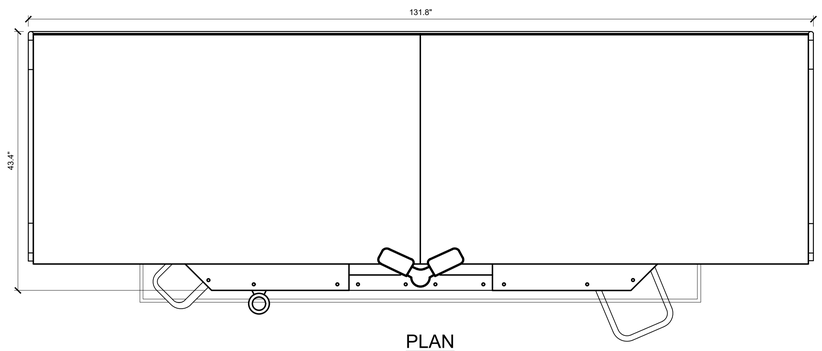

PLAN

**CD3 WAYSIDE SOLAR POWERED
BOAT WASH BY OWNER WITH
PRECAST CONCRETE BASE**

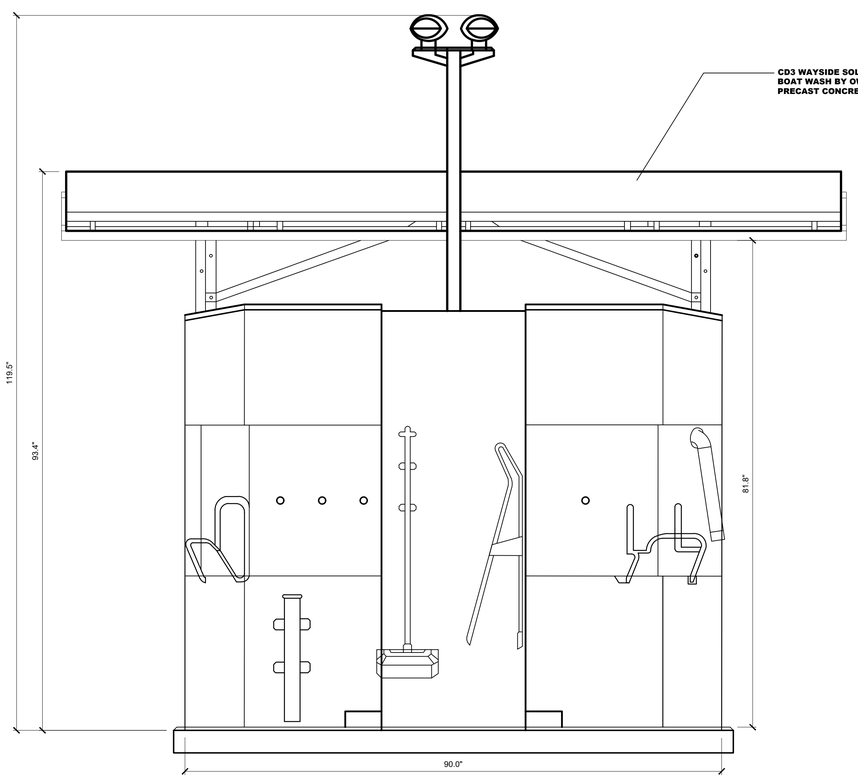

CD3 WAYSIDE SOLAR UNIT - ELEVATION

NOT TO SCALE

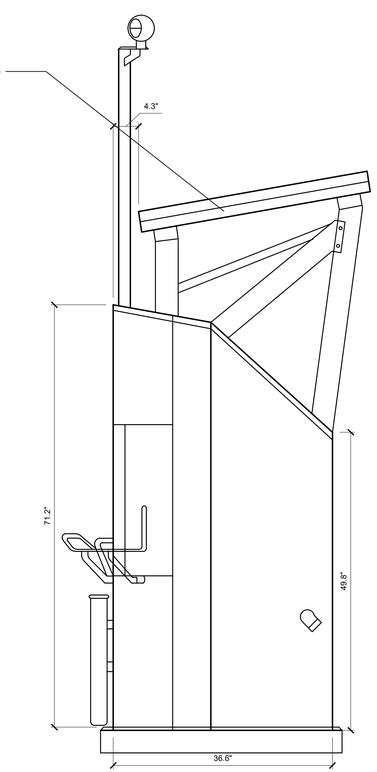

CROSS SECTION

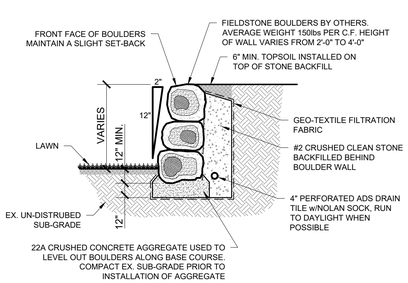

BOULDER WALL SECTION

SCALE: NOT TO SCALE

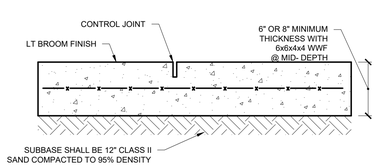

NOTE:

1 - PROVIDE 3/8" EXPANSION JOINT WHERE WALK MEETS BUILDING OR RETAINING WALL.

2 - CONCRETE POUR NOT TO EXCEED 400 S.F. PER SECTION, LENGTH OF POUR SHALL NOT EXCEED WIDTH BY 4 TIMES

CONCRETE PAVEMENT CROSS SECTION

NOT TO SCALE

FLEIS&VANDENBRINK
DESIGN, BUILD, OPERATE.
603 Bay St, First Floor
Traverse City, MI 49684
P: 231.932.8600
F: 231.932.8700

REVISION:

WHITEWATER TOWNSHIP
9500, PARK RD, WILLIAMSBURG, MI
WHITEWATER TOWNSHIP PARK IMPROVEMENTS
DETAILS

DESIGN TEAM:	PROJ MNGR: RS DESIGNED BY: AF / RS DRAWN BY: AF CHECK BY:

842850_C500 DETAILS
031722 andrew.filler

MARCH 2022
F&V PROJECT NO.
842850

C500

M:\Pro\841001-842000\842850 Whitewater Park Waterways Grant Eng 2020\Cad\Proj\842850_C500 DETAILS.dwg - plotted on 3/17/2022 2:12 PM

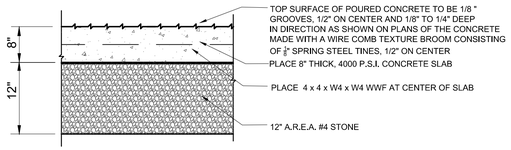

8" POURED IN PLACE CONCRETE SECTION

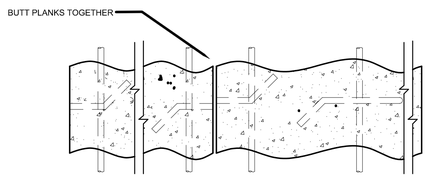

SECTION D-D (4X)

72" WIDE PLANK

NOTES:
1.) MATERIAL: AIR ENTRAINED PRECAST CONCRETE

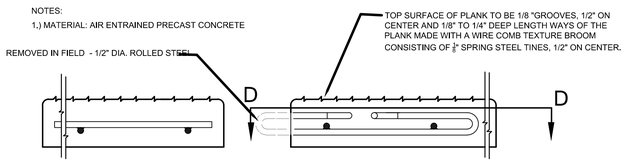

SECTION E-E (4X)

SECTION G-G (4X)

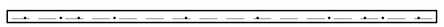

SIDE VIEW

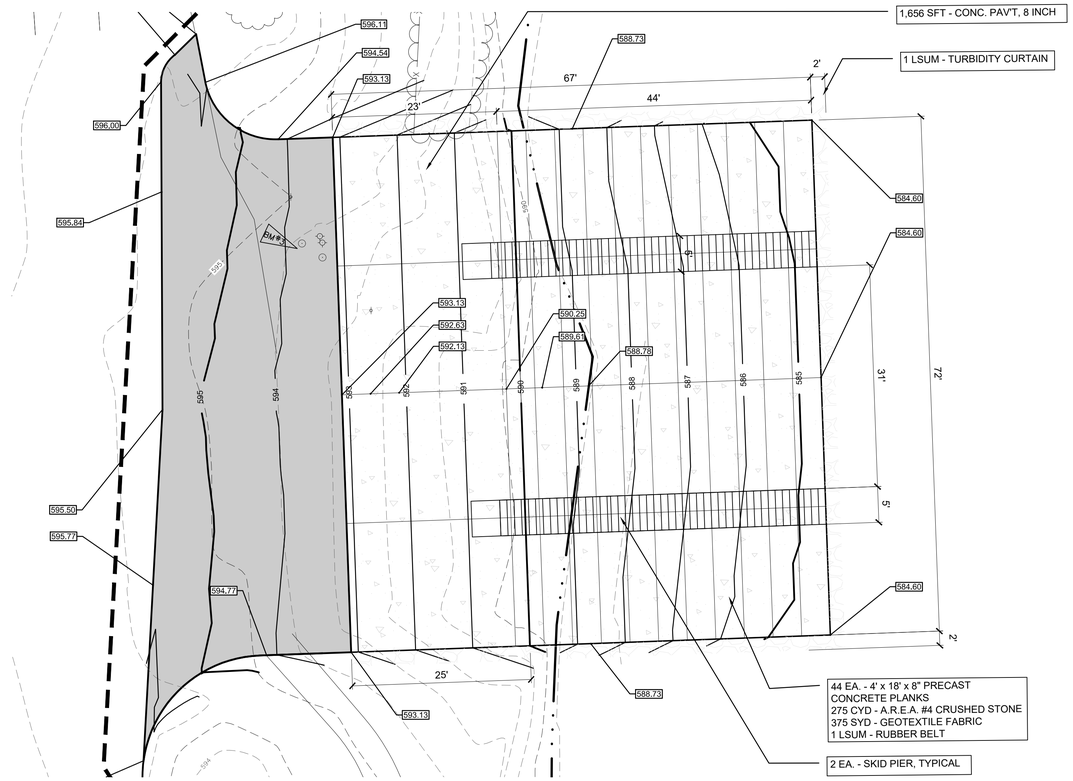

LAUNCH AREA ENLARGEMENT PLAN

SCALE: 1"=10'

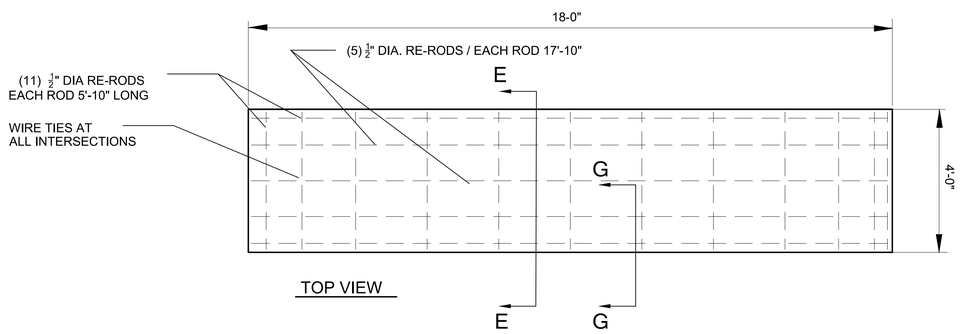

TOP VIEW

PRECAST CONCRETE PLANK DETAILS

NOT TO SCALE

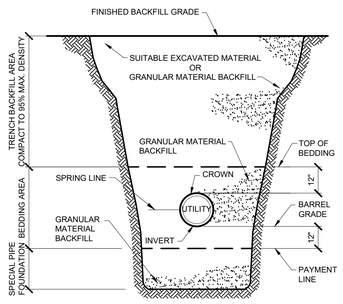

UTILITY TRENCHING, EXCAVATING AND BACKFILLING TERMINOLOGY

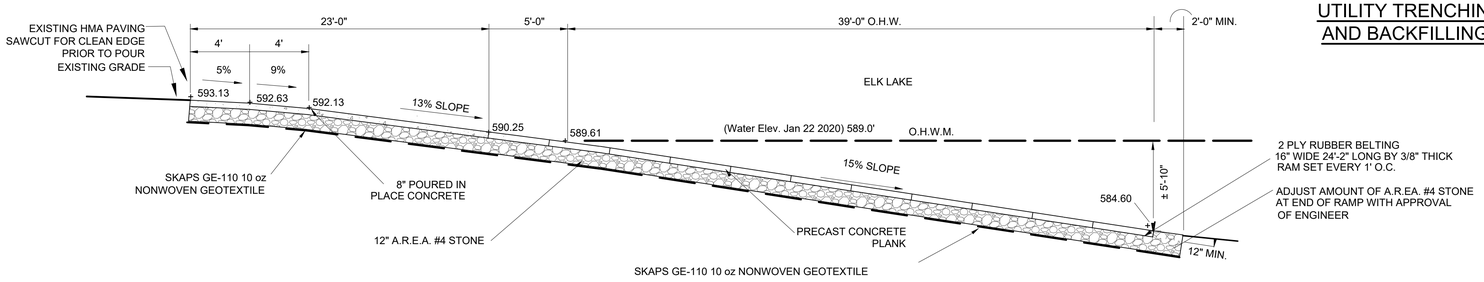

LAUNCH AREA CROSS-SECTION

SCALE: 1" =5'

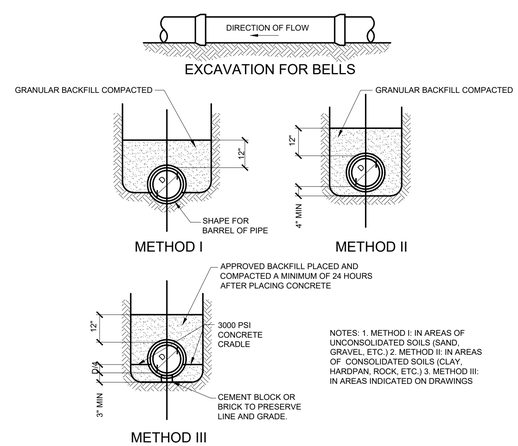

NOTES: 1. METHOD I: IN AREAS OF UNCONSOLIDATED SOILS (SAND, GRAVEL, ETC.) 2. METHOD II: IN AREAS OF CONSOLIDATED SOILS (CLAY, HARDPAN, ROCK, ETC.) 3. METHOD III: IN AREAS INDICATED ON DRAWINGS

METHODS OF BEDDING GRAVITY PIPE

FLEIS&VANDENBRINK
DESIGN. BUILD. OPERATE.
603 Bay St, First Floor
Traverse City, MI 49684
P: 231.932.8600
F: 231.932.8700

REVISION:

WHITEWATER TOWNSHIP
9500, PARK RD, WILLIAMSBURG, MI
WHITEWATER TOWNSHIP PARK IMPROVEMENTS
LAUNCH AREA ENLARGEMENT PLAN & DETAILS

DESIGN TEAM:	PROJ MNGR:	RS
	DESIGNED BY:	AF / RS
	DRAWN BY:	AF
	CHECK BY:	

842850_C501 DETAILS
031722 andrew.filler

MARCH 2022

F&V PROJECT NO.
842850

C501

M:\Proj\841001-842000\842850 Whitewater Park Waterways Grant Eng 2020\Cad\Proj\842850_C501 DETAILS.dwg - plotted on 3/17/2022 2:13 PM

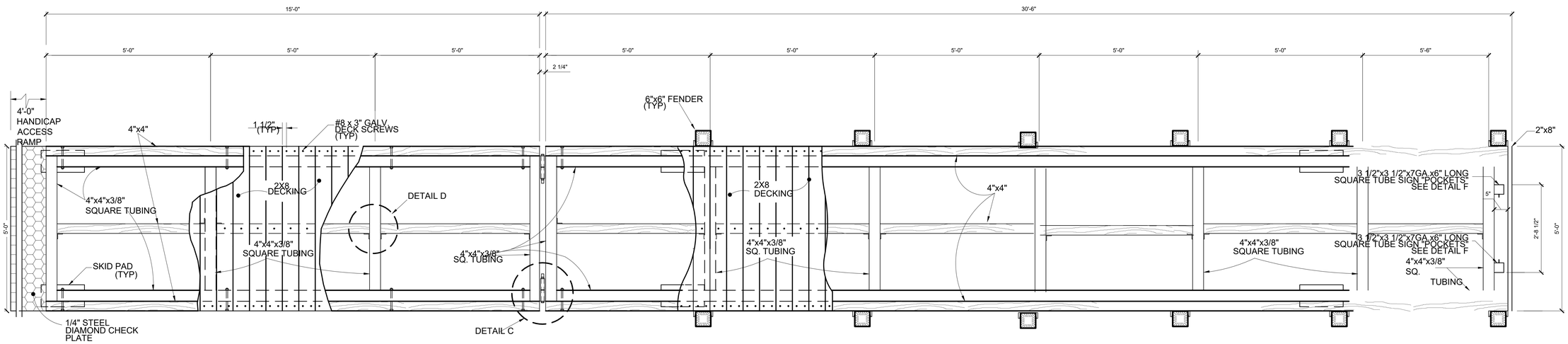

PLAN
SCALE 3/4" = 1'-0"

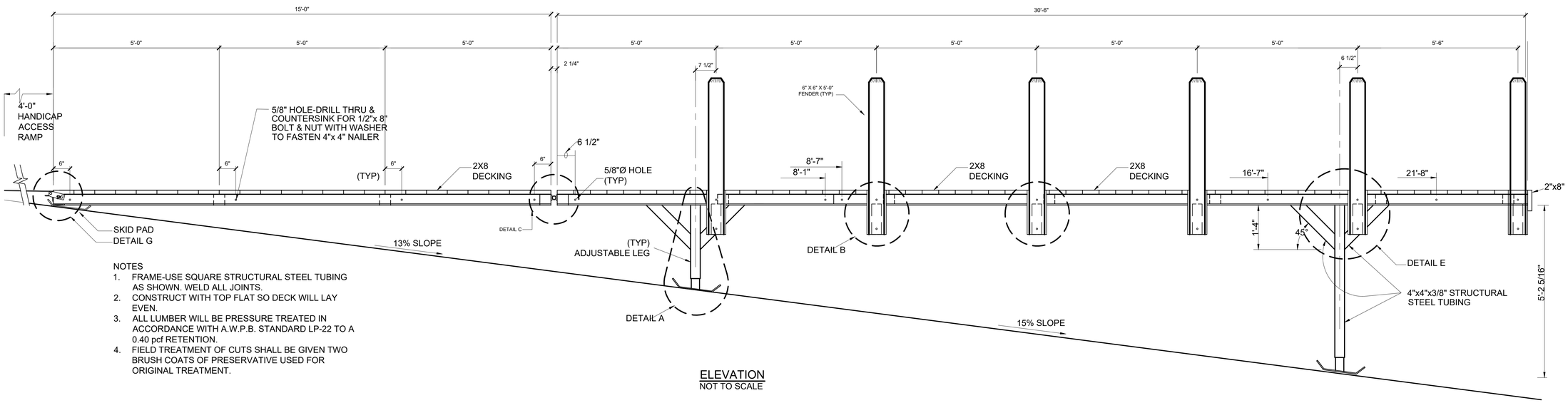

NOTES
1. FRAME-USE SQUARE STRUCTURAL STEEL TUBING AS SHOWN. WELD ALL JOINTS.
2. CONSTRUCT WITH TOP FLAT SO DECK WILL LAY EVEN.
3. ALL LUMBER WILL BE PRESSURE TREATED IN ACCORDANCE WITH A.W.P.B. STANDARD LP-22 TO A 0.40 pcf RETENTION.
4. FIELD TREATMENT OF CUTS SHALL BE GIVEN TWO BRUSH COATS OF PRESERVATIVE USED FOR ORIGINAL TREATMENT.

ELEVATION
NOT TO SCALE

FLEIS&VANDENBRINK
DESIGN. BUILD. OPERATE.
603 Bay St, First Floor
Traverse City, MI 49684
P: 231.932.8600
F: 231.932.8700

REVISION:

WHITEWATER TOWNSHIP
9500, PARK RD, WILLIAMSBURG, MI
WHITEWATER TOWNSHIP PARK IMPROVEMENTS

DETAILS

DESIGN TEAM:	PROJ MNGR: RS DESIGNED BY: AF / RS DRAWN BY: AF CHECK BY:

842850_C502 DETAILS
031722 andrew.filler

MARCH 2022
F&V PROJECT NO.
842850

C502

u:\Proj842100--842300\842850 Whitewater Park Waterways Grant Eng 2020\Cad\Proj\842850_C502 DETAILS.dwg - plotted on 3/17/2022 2:13 PM

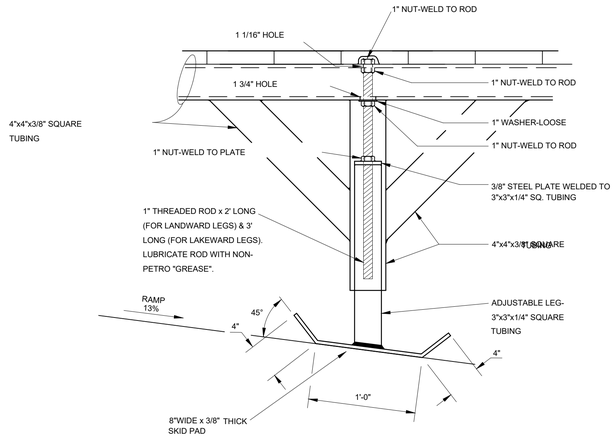

DETAIL A
1 1/2" = 1'-0"

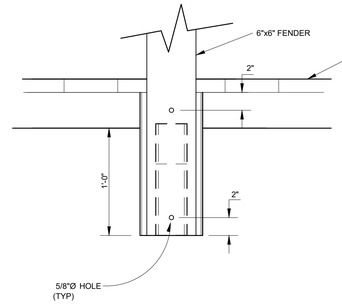

FRONT VIEW

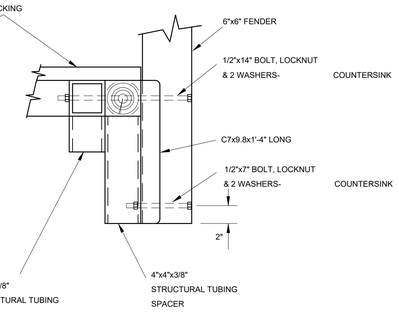

SIDE VIEW

DETAIL B
1 1/2" = 1'-0"

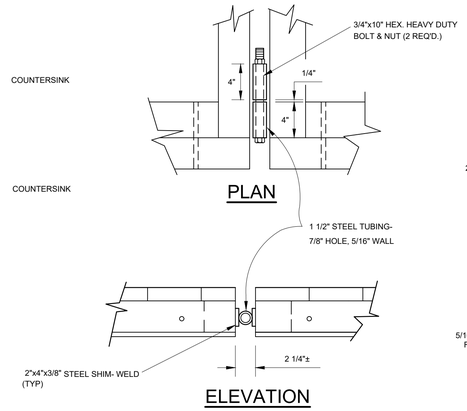

PLAN

ELEVATION

DETAIL C
1 1/2" = 1'-0"

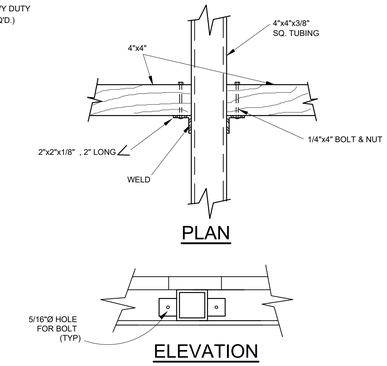

PLAN

ELEVATION

DETAIL D
1 1/2" = 1'-0"

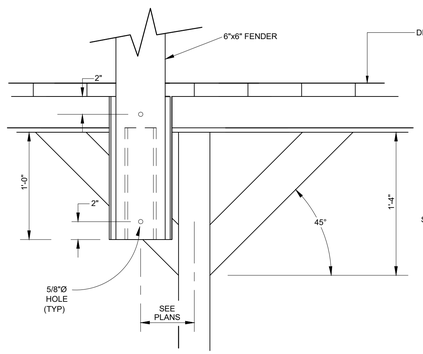

FRONT VIEW

DETAIL E
1 1/2" = 1'-0"

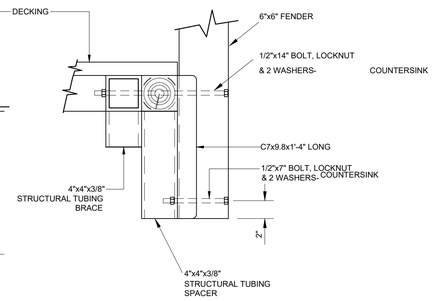

SIDE VIEW

DETAIL G
3" = 1'-0"

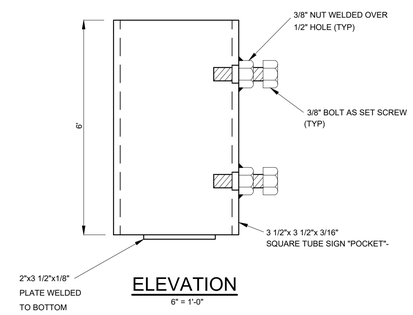

ELEVATION
6" = 1'-0"

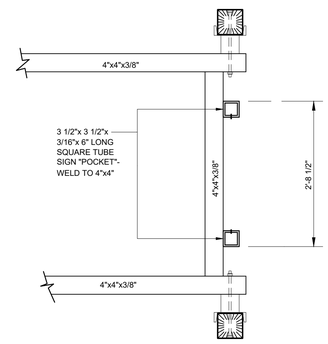

PLAN
3/4" = 1'-0"

DETAIL F

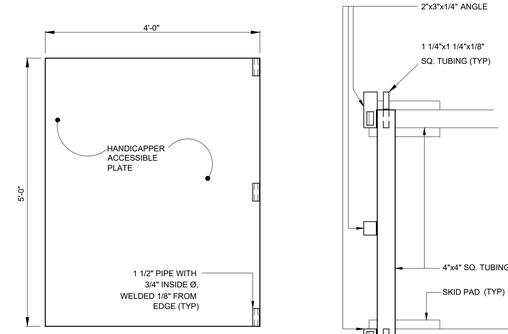

BOTTOM VIEW OF ACCESS PLATE
3/4" = 1'-0"

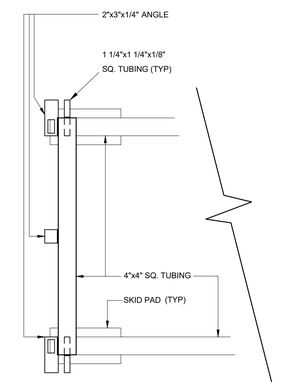

PLAN OF 2"x3" ANGLE
3/4" = 1'-0"

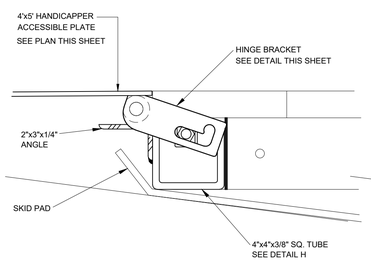

HANDICAPPER ACCESSIBLE PLATE SHOWN IN USE POSITION

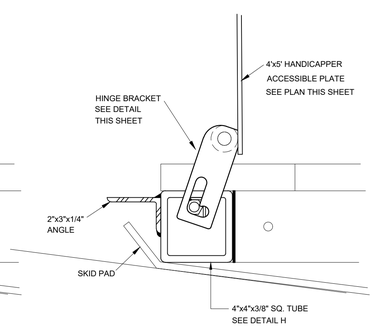

HANDICAPPER ACCESSIBLE PLATE SHOWN IN TRANSITION POSITION

DETAIL G
3" = 1'-0"

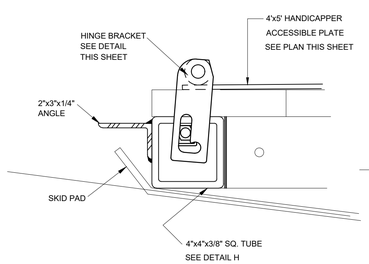

HANDICAPPER ACCESSIBLE PLATE SHOWN IN STORAGE POSITION

NOTE: BOLT THAT HOLDS HINGE BRACKET IN PLACE NOT SHOWN

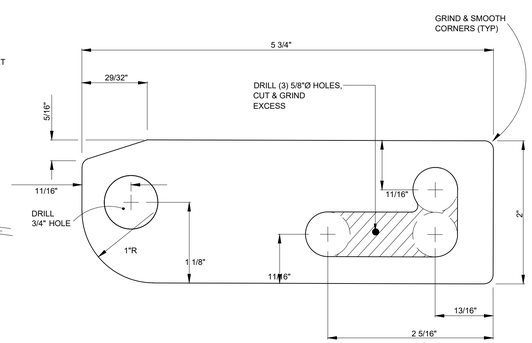

HINGE BRACKET
1" = 1"

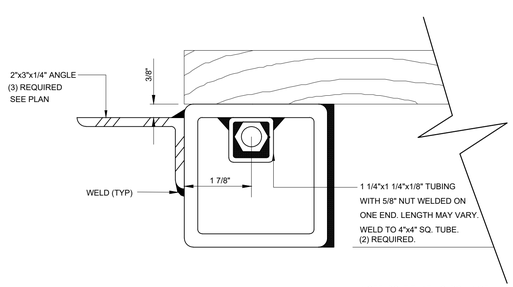

NOTE: BOLT THAT HOLDS HINGE BRACKET IN PLACE NOT SHOWN

DETAIL H
6" = 1'-0"

FLEIS & VANDENBRINK
DESIGN, BUILD, OPERATE.
603 Bay St, First Floor
Traverse City, MI 49684
P: 231.932.8600
F: 231.932.8700

REVISION:

WHITEWATER TOWNSHIP
9500, PARK RD, WILLIAMSBURG, MI
WHITEWATER TOWNSHIP PARK IMPROVEMENTS

DETAILS

DESIGN TEAM:	PROJ MNGR:	RS
	DESIGNED BY:	AF / RS
	DRAWN BY:	AF
	CHECK BY:	

842850_C503 DETAILS
031722 andrew.filler

MARCH 2022

F&V PROJECT NO.
842850

C503

M:\Pro\842100\-842850\842850 Whitewater Park Waterways Grant Eng 2020\Civil\Proj\842850_C503 DETAILS.dwg - plotted on 3/17/2022 2:13 PM